CROSS-SECTIONAL SCREENING FOR INSOMNIA AND BURNOUT IN NURSES WITH AND WITHOUT SHIFT WORK

SHIFTWORK IN NURSES: IS THERE A PROBLEM?

Peter Vermeir

UZ GENT

UNIVERSITEIT GENT

INTRODUCTION

Working 9 to 5 or not?

- > 30% of the European population sleeps < 6 hours per night
- Worldwide millions of people are working in shifts while the rest of us sleep
- Shiftworker → work schedule outside of the typical “9 to 5” business day
- 24-hour services and shift work are considered normal features of modern life
- From competitive perspective shiftwork is an excellent way to increase production and customer service without major increases in infrastructure
- Shiftwork creates several inherent risks

The health burden of shift work

- Metabolic disorders *(such as diabetes)*
- Obesity
- Hypertension
- ↑ total cholesterol
- ↑ triglycerides
- ↑ inflammatory markers (CRP) from visceral fat

Work place related health burden

- Poor concentration
- Accidents
- Injuries
- Absenteeism
- Errors
- Fatalities

The health burden of shift work

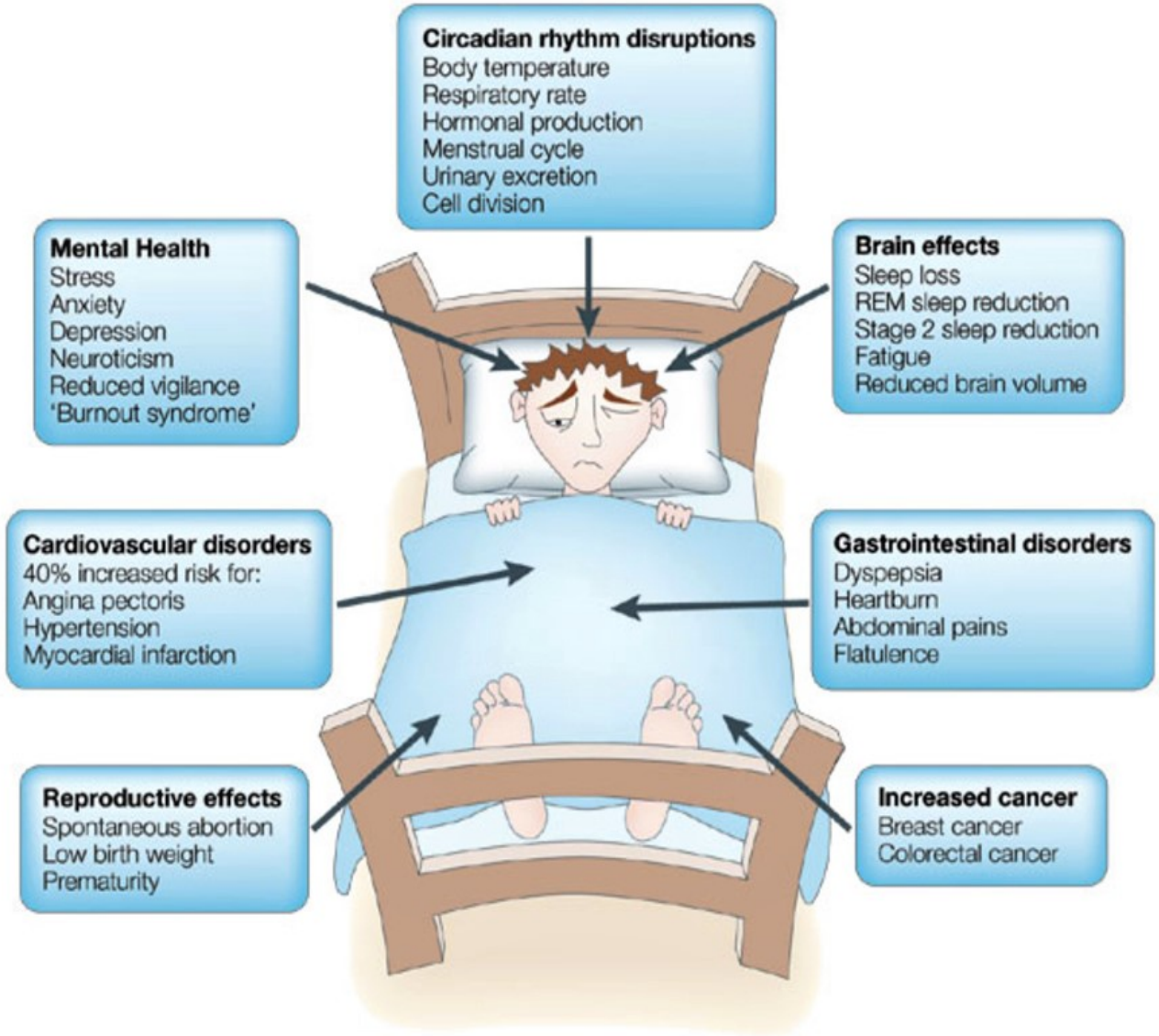

Alarming

- Shift workers are often employed in the most dangerous or responsible jobs (firefighting, physicians, nurses, pilots, managers, law enforcement, politicians, …)
- Improved sleep in workers may lead to improved productivity
- Not to ignore: the yearly costs due to decreased performance attributed to human fatigue

Aim of the study

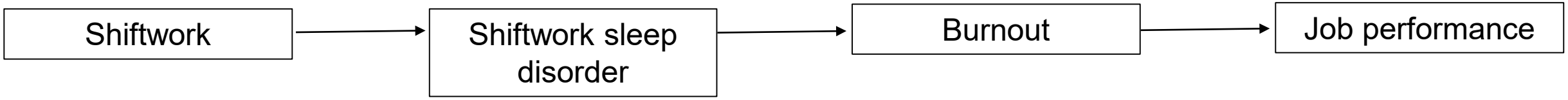

METHODS

Methods

- Cross-sectional design
- 175 nurses from 10 different wards from a Belgian general hospital
- Study from March – May 2018
- Questionnaire study
  - Digital
  - Validated
  - Self-reported
  - Reliability (α: .70 - .90)

Questionnaires

- Sleep problems
  - Insomnia severity index (ISI) (Morin et al.; Sleep, 2011)
  - Bergen shift work sleep questionnaire (BSWSQ) (Flo et al; Chronobiol Int, 2012)
- Daytime sleepiness
  - Epworth sleepiness scale (ESS) (Johns; Sleep, 1991)
- Burnout – different stages
  - Maslach burnout inventory (MBO) (Maslach & Jackson; J Occupat Behav, 1981; Schaufeli & Van dierendonck; J Org Behav, 1993)
    - Emotional exhaustion
    - Depersonalization
    - Personal accomplishment
- Job performance
  - Job performance scale (JPS) (Greenslade & Jimmieson; JAN, 2007)
    - Task performance
    - Contextual performance

Five stages of burnout in nursing

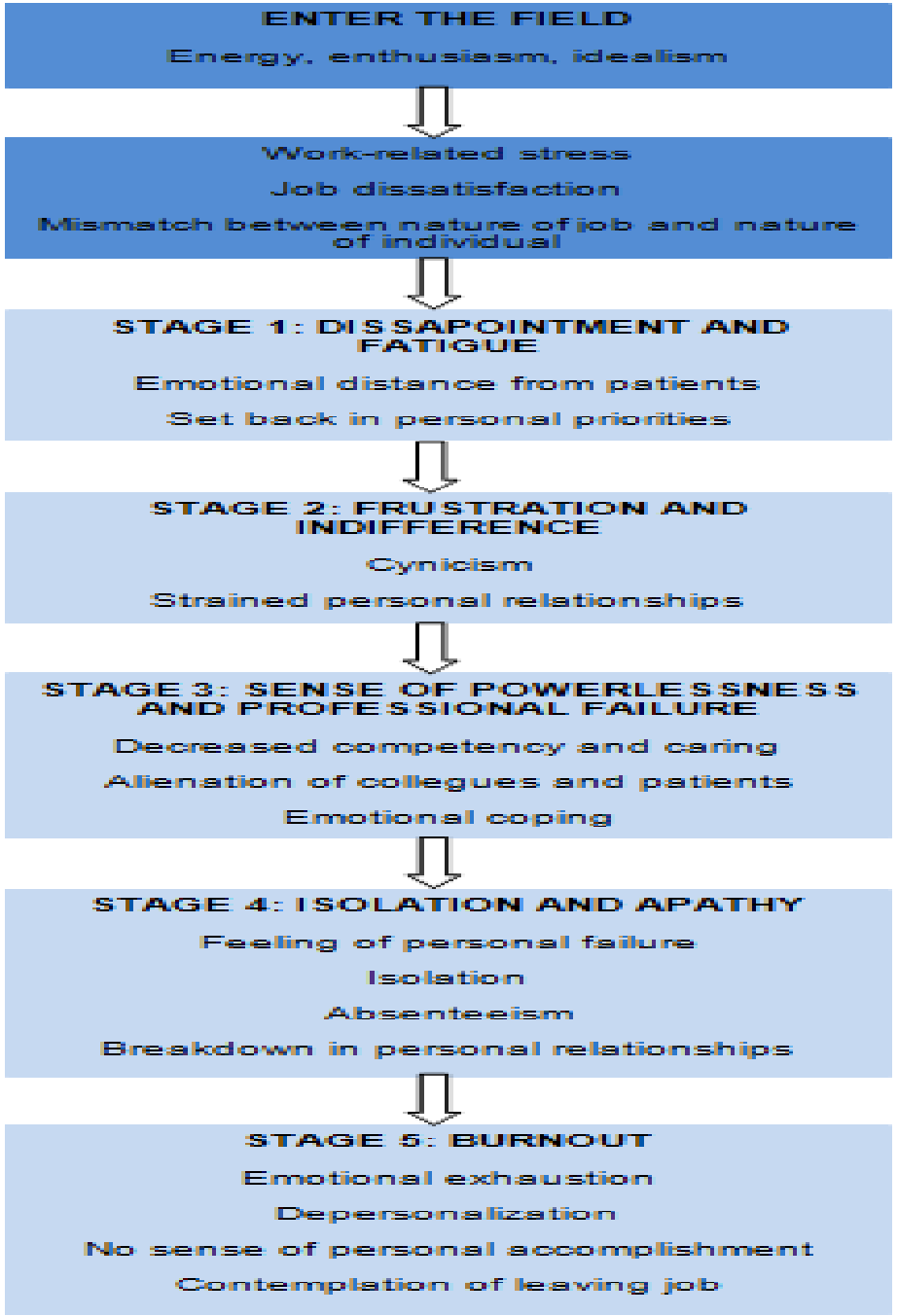

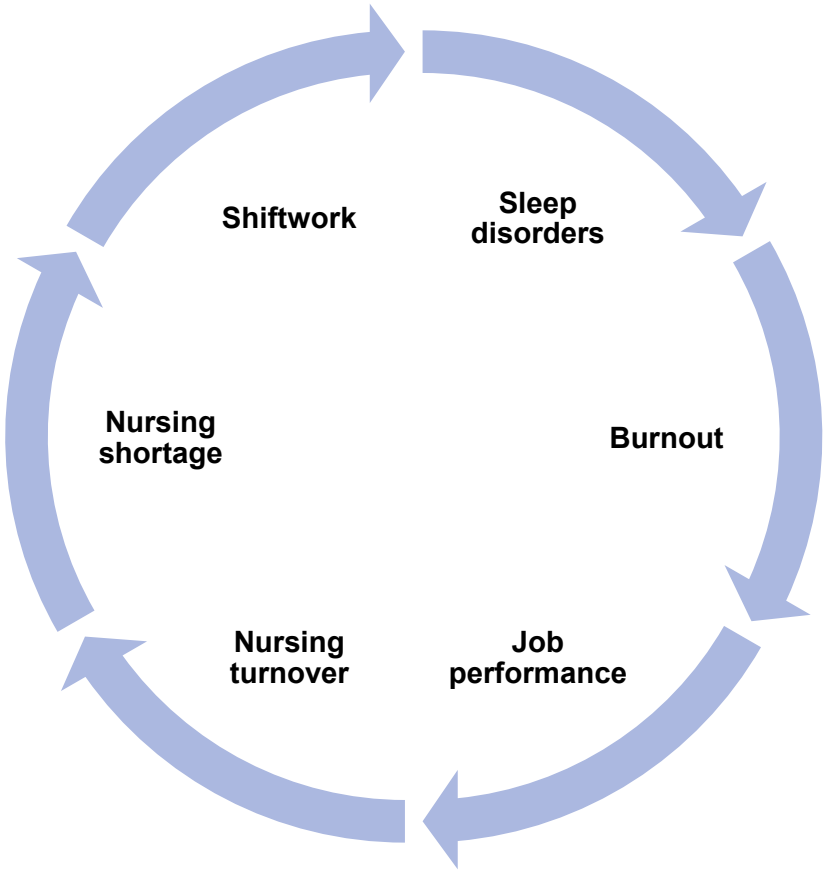

The relationship between shiftwork and the nursing shortage is cyclical: sleep disorders lead to burnout, which leads to less job performance and subsequent to higher nursing turnover and at the end the nursing turnover finally leads to nurse shortage.

RESULTS

Demographics

- Main characteristics:

Variables	n (%)
♀	149 (85.1)
Bachelor degree	121 (69.1)
Employment rate >75%	141 (80.6)
Rotating shift work schedule	119 (68.0)
< 40 years	101 (57.7)
> 10 years seniority	100 (57.2)
Not using sleep medication	159 (90.9)

ISI, BSWQ, ESS

Sleep problems and sleepiness

- **Insomnia**
  - > 1/3 of nurses
    - ♀ (p<.01*)
    - more seniority (.044*)
    - rotating shift work (p.018*)
    - intensive care units (.002*)
    - more use of sleep medication (.009*)
- **Sleep problems associated with work shifts**
  - Day (early morning shifts) & night shifts
- **Sleepiness**
  - ESS >10: n= 84 (48%)

Burnout and job performance

- **Burnout**

Variable	n (%)
Risk for developing burnout	84 (47.9)
Clinical burnout	16 (9.1)

  - Burnout & use of sleep medication (*P* <.01)

- **Job performance**
  - Performance: moderate level
  - Higher levels of performance: >40 years (p = .036*), longer seniority (p= .028*)

Variable	Mean (SD)
Job performance	87.27 (11.31)
Task performance	4.66 (7.46)
Contextual performance	42.61 (5.95)

Correlations

Correlations

	1.	2.	3.	4.	5.	6.	7.	8.	9.
1. ISI	-								
2. ESS	**,35****	-							
3. MBO	**,36****	**,31****	-						
4. MBO_EE	**,46****	**,41****	**,80****	-					
5. MBO_DEP	**,16***	**,16***	**,69****	**,44****	-				
6. MBO_PA	0,12	0,08	**,74****	**,29****	**,44****	-			
7. JPS	-0,09	**-,18***	**-,27****	-0,05	**-,22****	**-,39****	-		
8. JPS task	0,01	-0,06	-0,14	0,04	**-,15***	**-,26****	**,87****	-	
9. JPS context	**-,18***	**-,22****	**-,37****	-0,14	**-,28****	**-,46****	**,81****	**,45****	-
Mean	9,16	10,08	34,07	1,84	1,25	1,87	87,27	44,66	42,61
SD	5,22	4,68	15,90	1,13	0,93	0,89	11,31	7,46	5,95

** Correlation is significant at the 0.01 level (2-tailed).

* Correlation is significant at the 0.05 level (2-tailed).

DISCUSSION AND CONCLUSION

Discussion

Symptom	Prevalence
Insomnia	67/175 (38%)
Daytime sleepiness	84/175 (48%)
Risk for developing burnout	84/175 (48%)

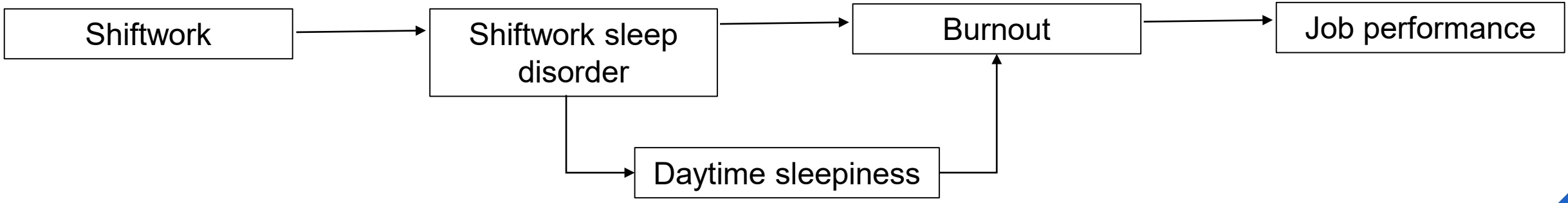

RECOMMENDATIONS

Macro level – government

- Strict regulations for the working hours of shiftworkers conforming to the European guidelines (93/104/EG)
- Increased nurse staffing and improved nurse work environments
- Stimulating beneficial behaviour through targeted campaigns and education programs on self-care during nursing training and beyond
- Creating supportive professional nursing care environments. Example: Magnet Hospitals (American Nurses Credentialing Center)

Meso level – health care management

- Supporting and improving the work environment and working conditions of nurses
- Increased participation of staff in the policy of organizations through active involvement
- Paying attention and having respect for the work and private life balance and the individual career development of the employee
- Employer ensures adequate nurse staffing
- Monitoring health and quality indicators such as number of overtime, absenteeism, burnout, turnover and quality of work performance
- Stimulating cooperation between the various actors in the health sector

Micro level – nursing wards

- Develop and promote self-care in shift work
- Develop coaching and education programs such as stress management, cognitive behavioral techniques and other coping strategies
- Optimal work-life balance
- Promote healthy sleep hygiene with attention to sleep quality and quantity
- Allowing power naps (max. 20 minutes) during night shifts
- Adapted meals in night shifts: a meal high in carbs and proteins at 2 AM and in the morning a light meal

Thanks to

Prof. Dr. Dirk Vogelaers – Prof. Dr. An Mariman –Lic. Liesbeth Delesie – Kim Den Hert – Lara Moons – Ruben Vermeir

UZ GENT

UNIVERSITEIT GENT

PETER VERMEIR
Liaison officer UZ Gent - Ugent
Clinical professor I Faculty of Medicine and Healthcare Science
www.petervermeir.be

Universitair Ziekenhuis Gent
C. Heymanslaan 10 | B 9000 Gent
T +32 (0)9 332 21 11
E info@uzgent.be

www.uzgent.be
Volg ons op

UZ GENT
UNIVERSITEIT GENT